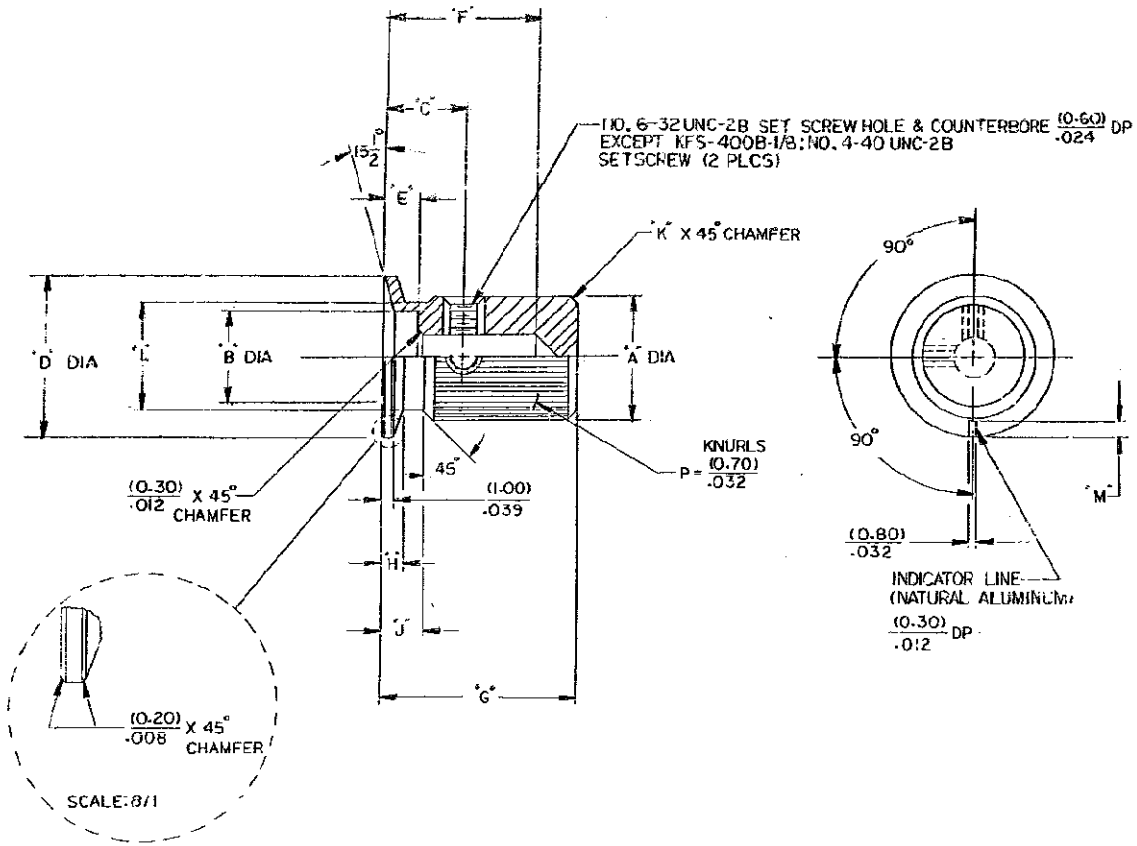

MODEL NO.	FINISH	"A" DIA	"B" DIA	"C" DIM	"D" DIA	"E" DIM	"F" DIM	"G" DIM	"H" DIM	"J" DIM	"K" DIM	"L" DIM	"M" DIM
KFS-600B-1/4	BLACK MATTE ANODIZE	(15.70)/.618	(9.70)/.382	(9.70)/.382	(25.40)/1.000	(4.10)/.161	(16.00)/.630	(20.60)/.811	(2.80)/.110	(4.80)/.189	(1.30)/.051	(12.70)/.500	(5.00)/.197
KFS-500B-1/4		(12.70)/.500	(9.70)/.382	(6.40)/.252	(16.00)/.630	(4.10)/.161	(12.00)/.472	(16.00)/.630	(1.60)/.063	(3.20)/.126	(0.80)/.031	(11.20)/.441	(1.50)/.059
KFS-400B-1/8		(9.70)/.382	(7.10)/.280	(6.50)/.256	(12.70)/.500	(2.50)/.098	(11.90)/.469	(15.00)/.591	(1.45)/.057	(2.68)/.105	(.280)/.011	(8.03)/.316	(1.50)/.059

(16.03) — (64.00) / .631 — 2.520	± (0.30)/.012	NON ACCUMULATIVE ANGULAR ±2°	
(4.01) — (16.00) / .158 — .630	± (0.20)/.008	(6.40)/.252 DIA	+ (0.025)/.0010
(0.50) — (4.00) / .020 — .157	± (0.10)/.004	(3.20)/.126 DIA SHAFT	− (0.00)/.000
TOLERANCES UNLESS NOTED			

P	LTR	DESCRIPTION	DATE	DWN	APVD
	A1	REVISED PER ECO-11-004917	21MAR11	RK	HMR

ALCO CONFIDENTIAL

DIMENSIONS AND TOLERANCES PER ANSI Y14.5

DO NOT SCALE DRAWING

MATERIAL: 6061 ALUMINUM

FINISH: SEE NOTE E

TE Connectivity

KFS SERIES KNOBS

SHEET 4 OF

DWG SIZE E

8-1437621-6

REV. A1

CUSTOMER DRAWING